ADVANCE TABCO
SMART FABRICATION™

STAINLESS STEEL

HAND SINKS

ELECTRONIC OPERATED FAUCETS

Conforms To NSF 61/9 Lead Free Requirements

Space Saver Sink With Side Splashes Also Available Click Here!

SPACESAVER



7-PS-53



7-PS-51



7-PS-61



7-PS-81



7-PS-52



7-PS-91

TOUCHLESS SOAP DISPENSER



7-PS-131

Item #: _____ **Qty #:** _____

Model #: _____

Project #: _____

FEATURES:

One piece **Deep Drawn** sink bowl design.

Sink bowl is 10"x14"x5" (Excludes 7-PS-53. Unit has 9"x9"x5" bowl).

"Hands Free" Electronic Faucet makes use of infrared technology to sense the user's presence and immediately turn on water supply that is pre-mixed to desired temp.

Electronic gooseneck faucet is splash mounted and comes complete with AC/DC control module, sensor, 4 "AA" batteries and spout.

All sink bowls have a large liberal radii with a minimum dimension of 2" and are rectangular in design for increased capacity.

Stainless steel basket drain 1 1/2" IPS.

Additional Features:

7-PS-51 & 7-PS-81 lever operated drain and built-in overflow with plastic overflow tube and spring clamps. P-Trap is 1 1/2".

7-PS-81 towel dispenser with hinged towel box. Unit uses standard C-fold towels. Liquid Soap dispenser.

7-PS-52 towel dispenser with hinged towel box. Unit uses standard C-fold towels. Liquid soap dispenser. (Unit does not include overflow, lever drain & P-trap).

7-PS-91 pedestal skirt.

7-PS-131 K-175 electronic faucet, splash mount touchless liquid soap dispenser. 7-3/4" Side Splashes.

CONSTRUCTION:

All TIG welded.

Welded areas blended to match adjacent surfaces & to a satin finish.

Die formed Countertop Edge with a 3/8" No-Drip offset.

One sheet of stainless steel - No Seams.

MATERIAL:

Heavy gauge type 304 series stainless steel.

Electronic Faucet solid brass, chrome plated.

Wall mounting bracket is stainless steel and of offset design.

All fittings are brass / chrome plated unless otherwise indicated.

MECHANICAL:

Electronic faucet is 1/2" male IPS thread.

K-175 Replacement Electronic Operated Faucet.

Faucet Flow Rate: 2.2 GPM/8.3 LPM aerator. 60 PSI.



7-PS-104

HANDS-FREE TOUCHLESS SOAP DISPENSER UPGRADE

- Wall Mounted
- A/C or Battery Powered (Requires 4 "AA" Batteries. Not Included)
- Low Soap Indicator Window
- Includes Wall Bracket & Hardware
- Uses Liquid Soap

(Excludes 7-PS-131)

CLICK HERE TO VIEW SPEC SHEET

⚠ **WARNING:** Equipment that includes a faucet may expose you to chemicals, including lead, that are known to the State of California to cause cancer or birth defects or other reproductive harm. For more Info., visit www.p65warnings.ca.gov.

ADVANCE TABCO
SMART FABRICATION™
www.advancetabco.com

Customer Service Available To Assist You 1-800-645-3166 8:30 am - 7:00 pm E.S.T.

For Orders & Customer Service:
Email: customer@advancetabco.com or Fax: 631-242-6900

For Smart Fabrication™ Quotes:
Email: smartfab@advancetabco.com or Fax: 631-586-2933

DIMENSIONS and SPECIFICATIONS

TOL Overall: ± .500" Interior: ± .250" **FITTINGS SUPPLIED AS SHOWN** **ALL DIMENSIONS ARE TYPICAL**

7-PS-51

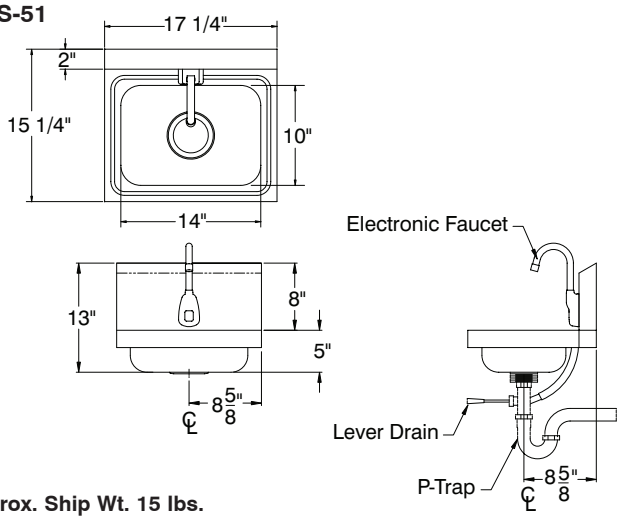

Approx. Ship Wt. 15 lbs.

7-PS-61

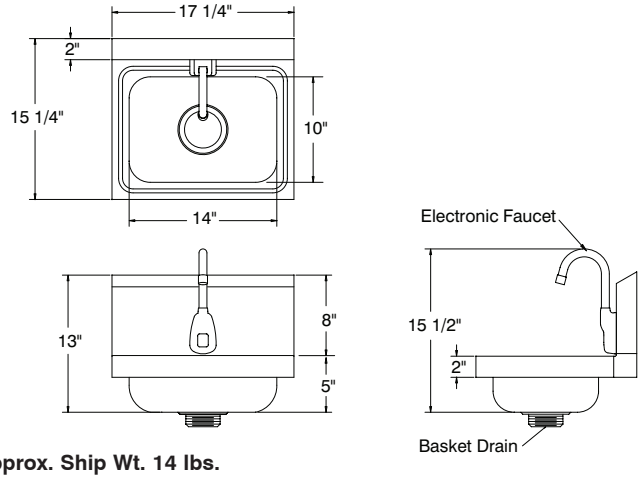

Approx. Ship Wt. 14 lbs.

7-PS-53

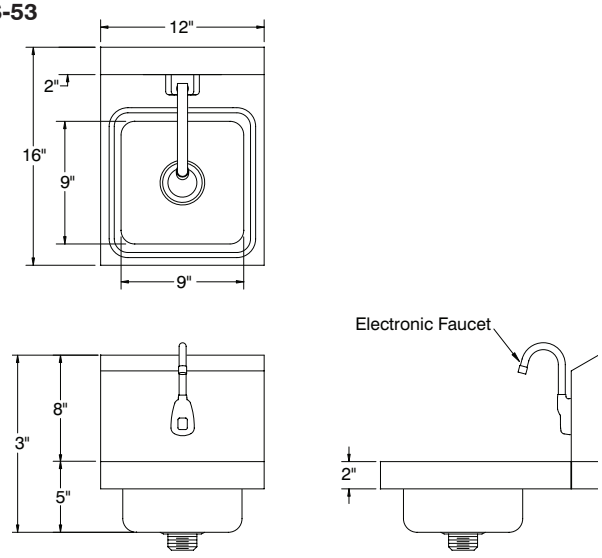

Approx. Ship Wt. 11 lbs.

7-PS-81 Approx. Ship Wt. 29 lbs.
7-PS-52 Approx. Ship Wt. 15 lbs.

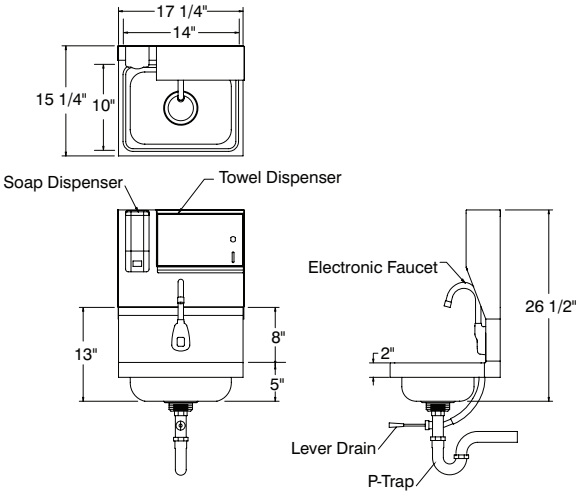

(7-PS-52 Excludes P-Trap, lever Drain & Overflow)

7-PS-91

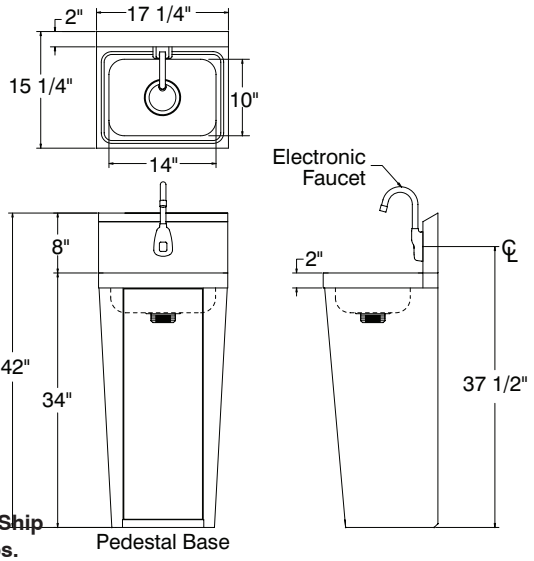

Approx. Ship Wt. 41 lbs.

7-PS-131

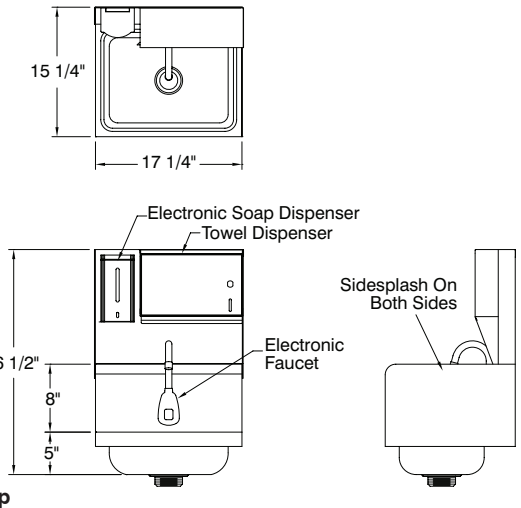

Approx. Ship Wt. 40 lbs.

ADVANCE TABCO
SMART FABRICATION™

325 Wireless Boulevard, Hauppauge, NY 11788

ADVANCE TABCO is constantly engaged in a program of improving our products. Therefore, we reserve the right to change specifications without prior notice.

© ADVANCE TABCO, OCTOBER 2026